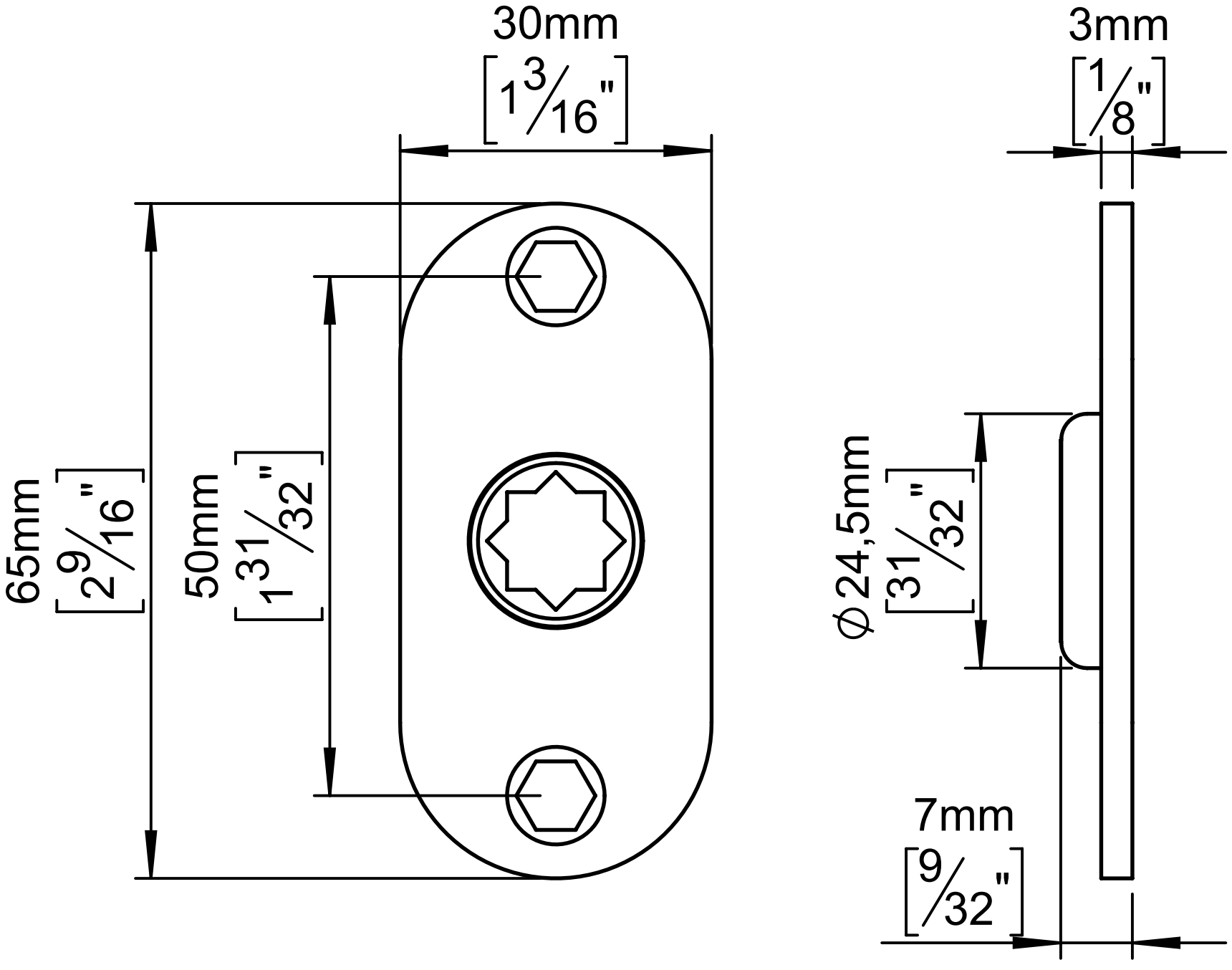
30mm
[1 3/16"]
3mm
[1/8"]
65mm
[2 9/16"]
50mm
[1 31/32"]
Ø24,5mm
[31/32"]
7mm
[9/32"]