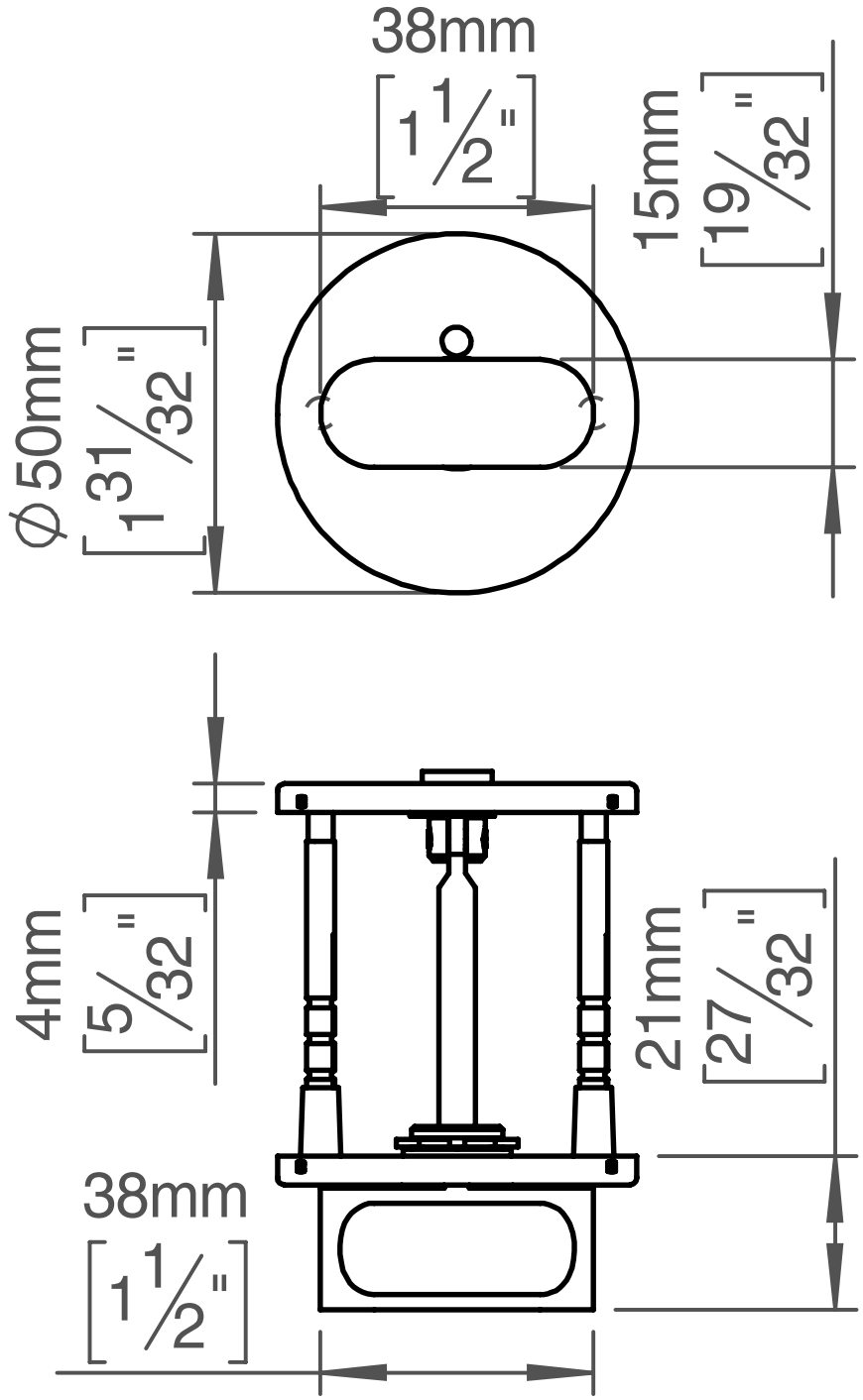
38mm
[1 1/2"]
15mm
[19/32"]
Ø 50mm
[1 31/32"]
4mm
[5/32"]
21mm
[27/32"]
38mm
[1 1/2"]