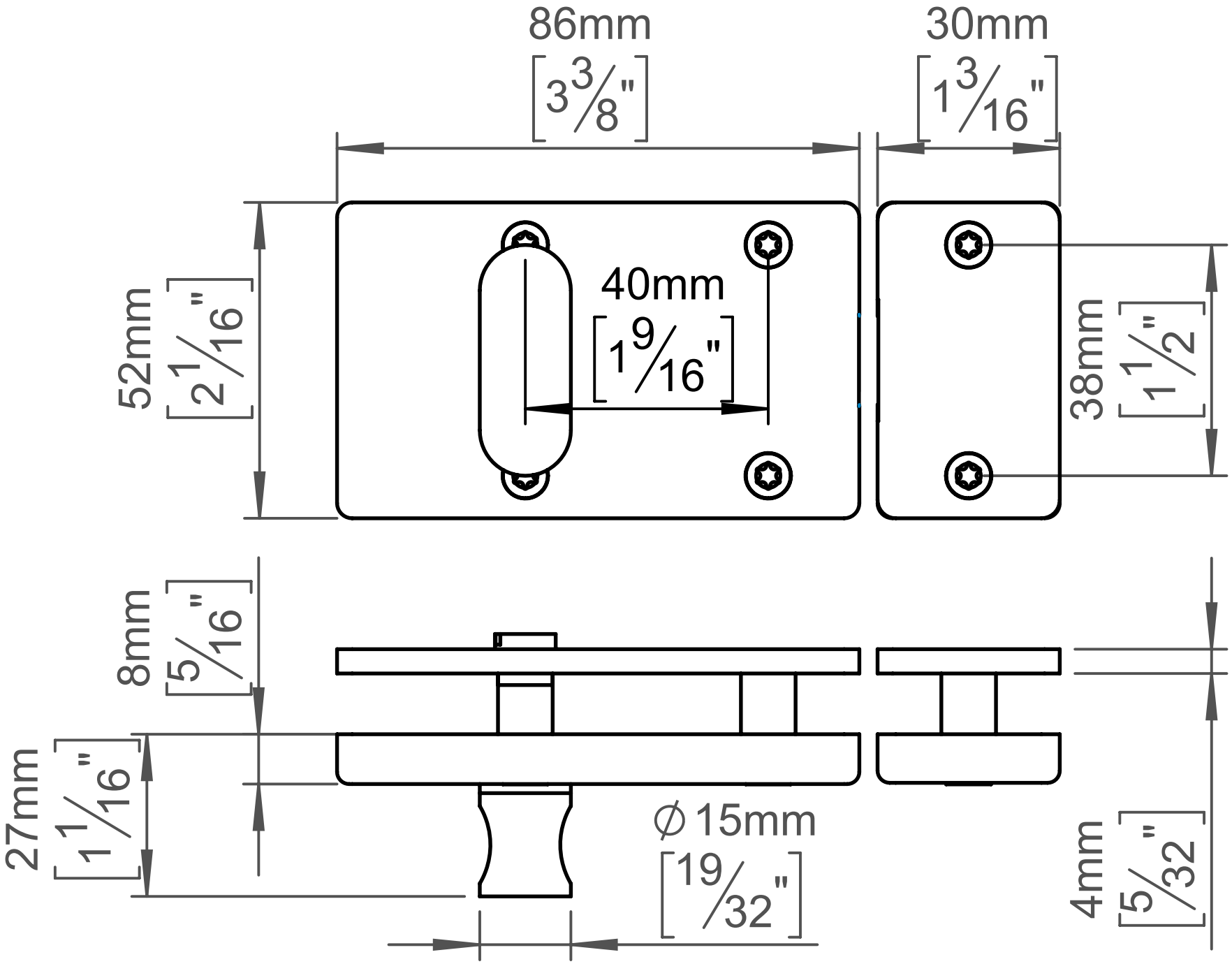
86mm
[3 3/8"]
30mm
[1 3/16"]
52mm
[2 1/16"]
40mm
[1 9/16"]
38mm
[1 1/2"]
8mm
[5/16"]
27mm
[1 1/16"]
∅15mm
[19/32"]
4mm
[5/32"]