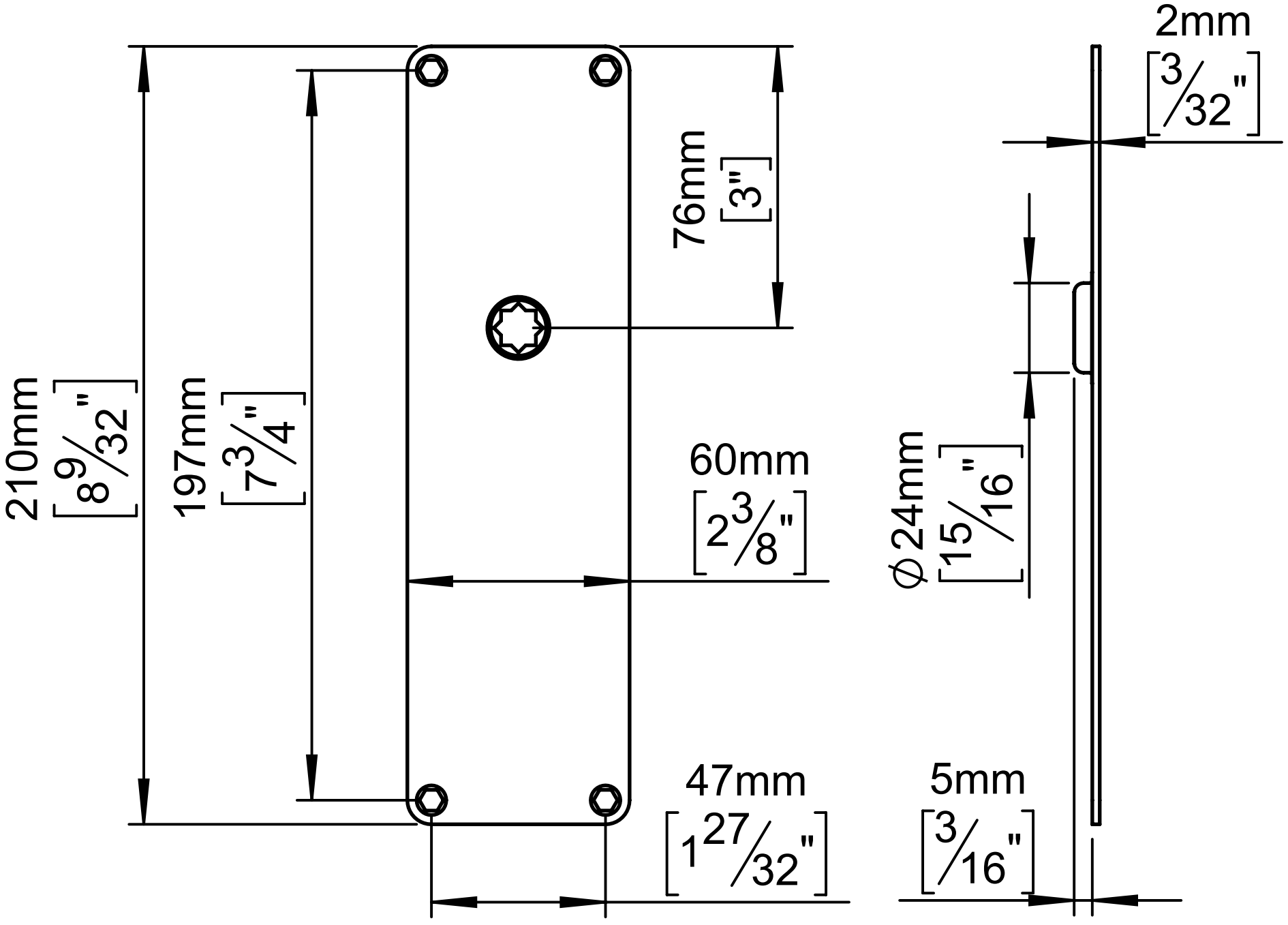
210mm
[8 9/32"]
197mm
[7 3/4"]
76mm
[3"]
60mm
[2 3/8"]
47mm
[1 27/32"]
2mm
[3/32"]
Ø24mm
[15/16"]
5mm
[3/16"]