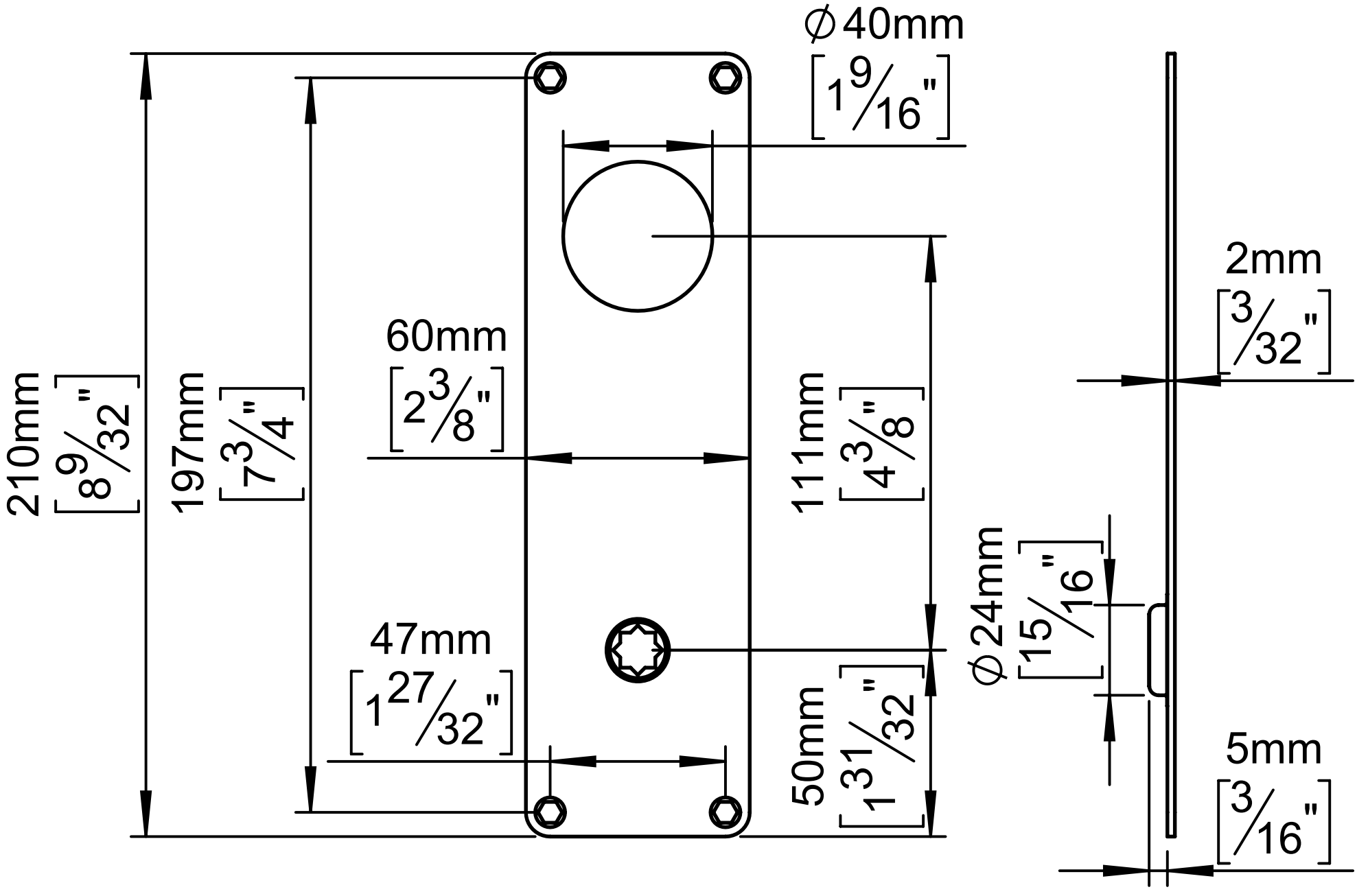
∅40mm
[1 9/16"]
210mm
[8 9/32"]
197mm
[7 3/4"]
60mm
[2 3/8"]
111mm
[4 3/8"]
2mm
[3/32"]
∅24mm
[15/16"]
47mm
[1 27/32"]
50mm
[1 31/32"]
5mm
[3/16"]