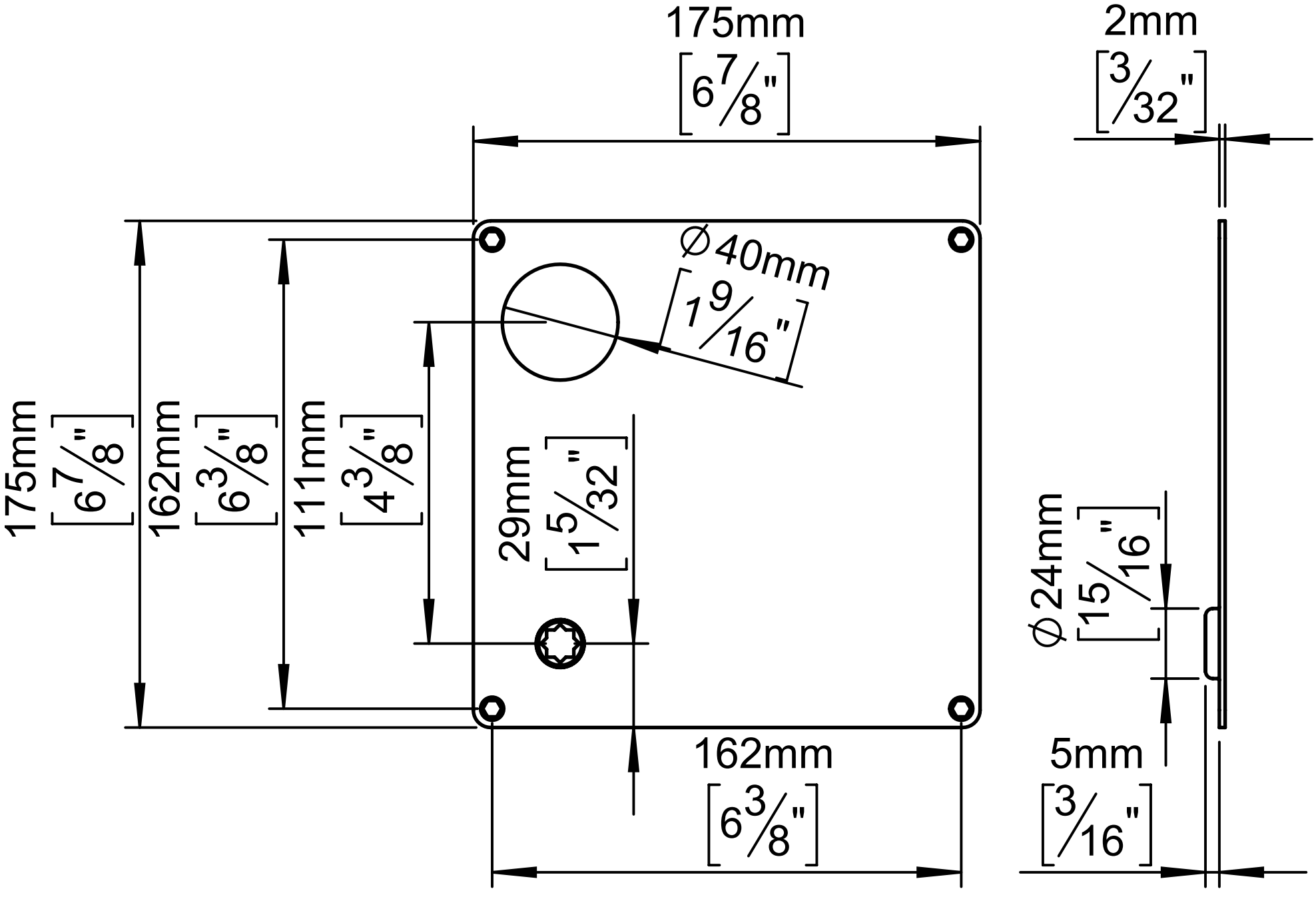
175mm
[6 7/8"]
2mm
[3/32"]
Ø40mm
[1 9/16"]
175mm
[6 7/8"]
162mm
[6 3/8"]
111mm
[4 3/8"]
29mm
[1 5/32"]
Ø24mm
[15/16"]
162mm
[6 3/8"]
5mm
[3/16"]