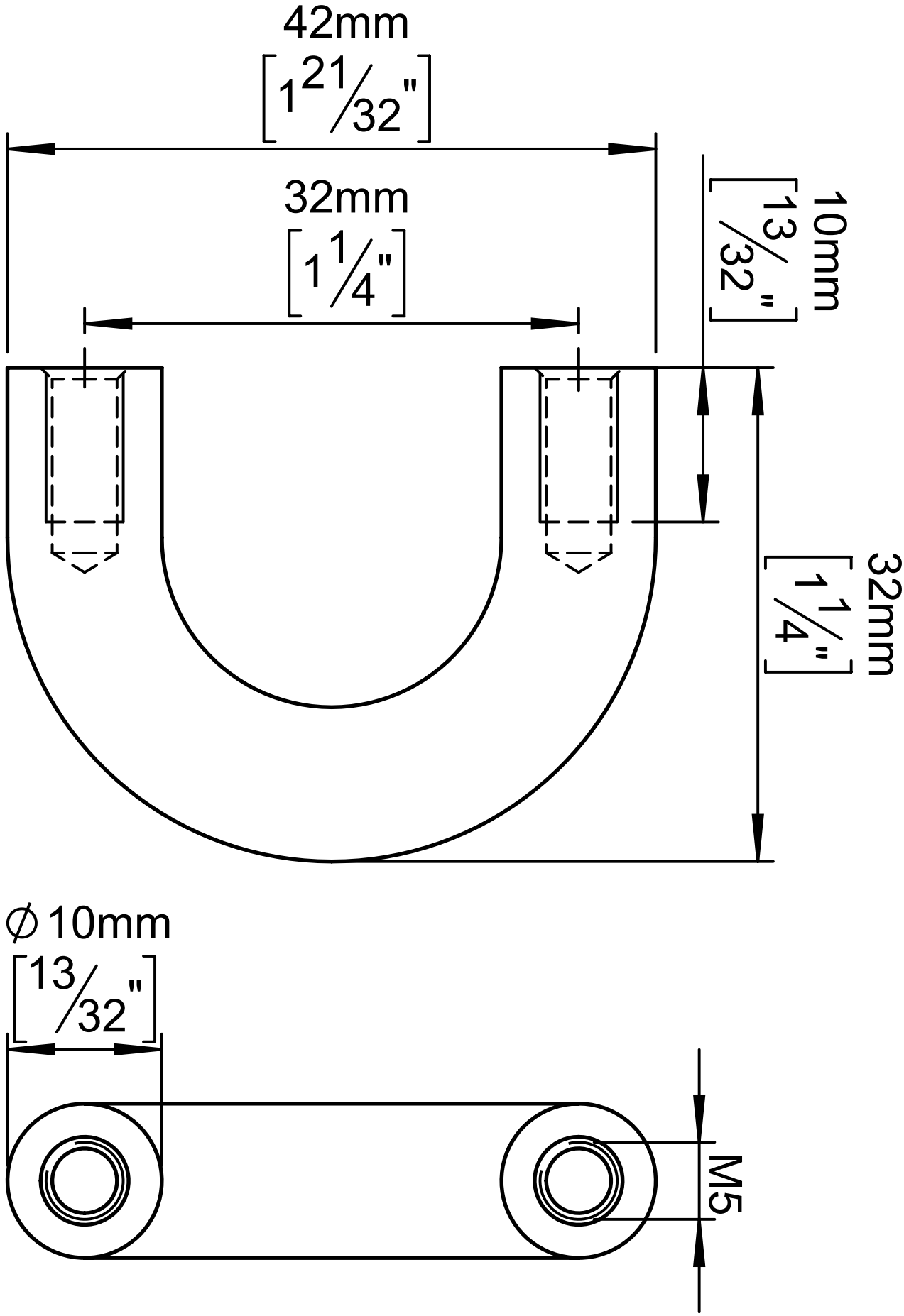
42mm
[1 21/32"]
32mm
[1 1/4"]
10mm
[13/32"]
32mm
[1 1/4"]
∅10mm
[13/32"]
M5