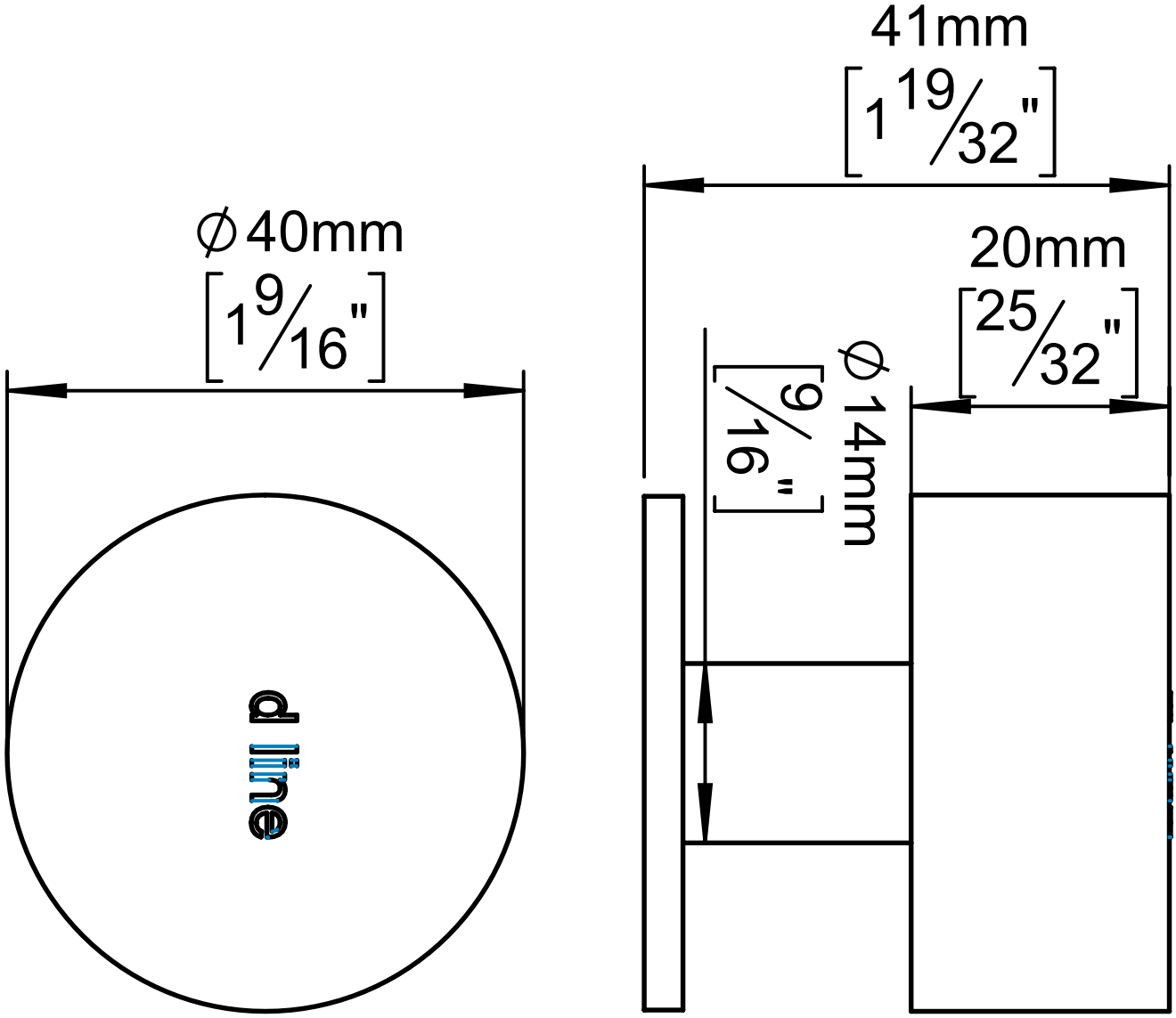
41mm
[1 19/32"]
∅40mm
[1 9/16"]
20mm
[25/32"]
∅14mm
[9/16"]
d line