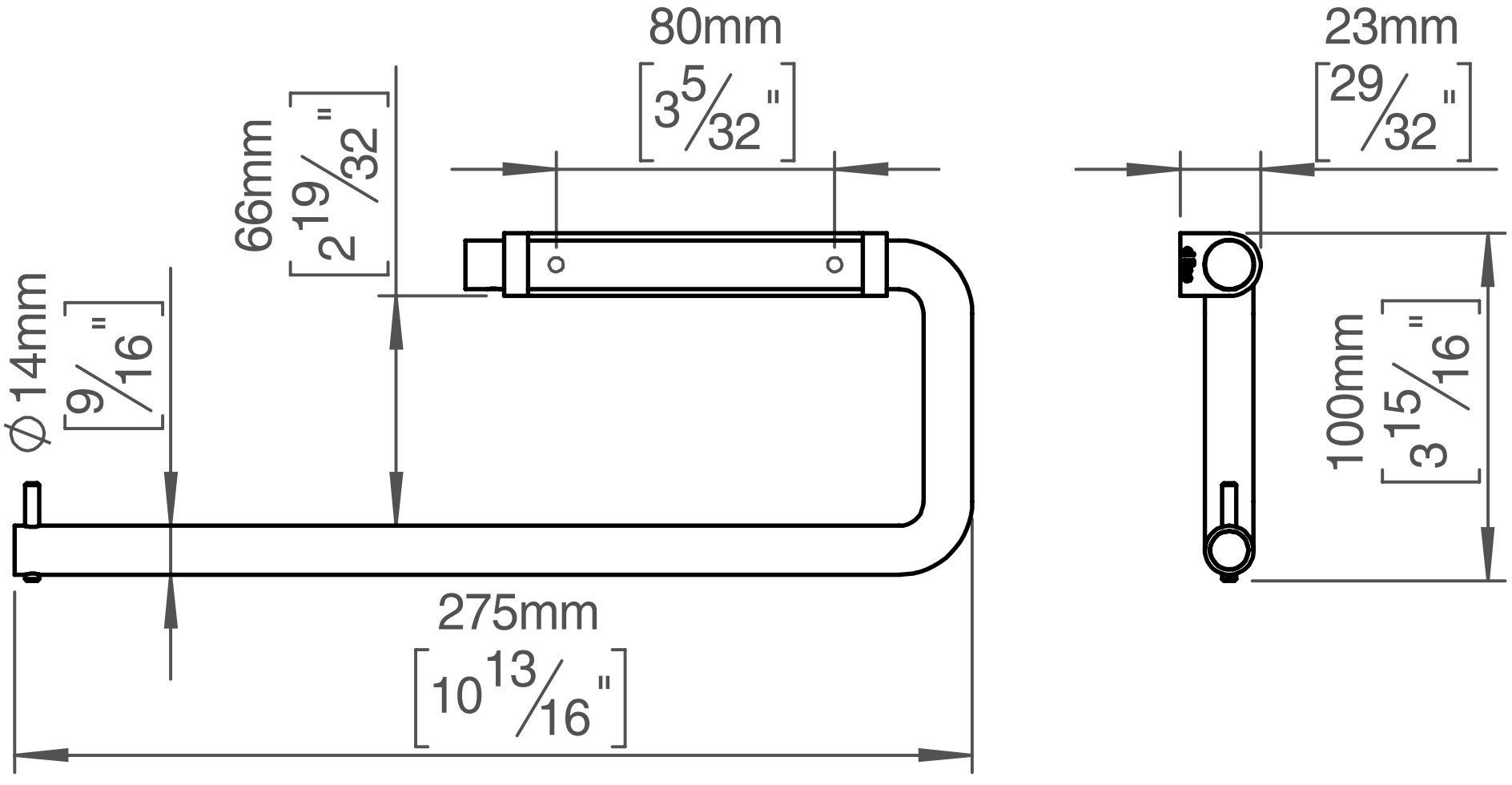
80mm
[3 5/32"]
23mm
[29/32"]
66mm
[2 19/32"]
Ø 14mm
[9/16"]
100mm
[3 15/16"]
275mm
[10 13/16"]