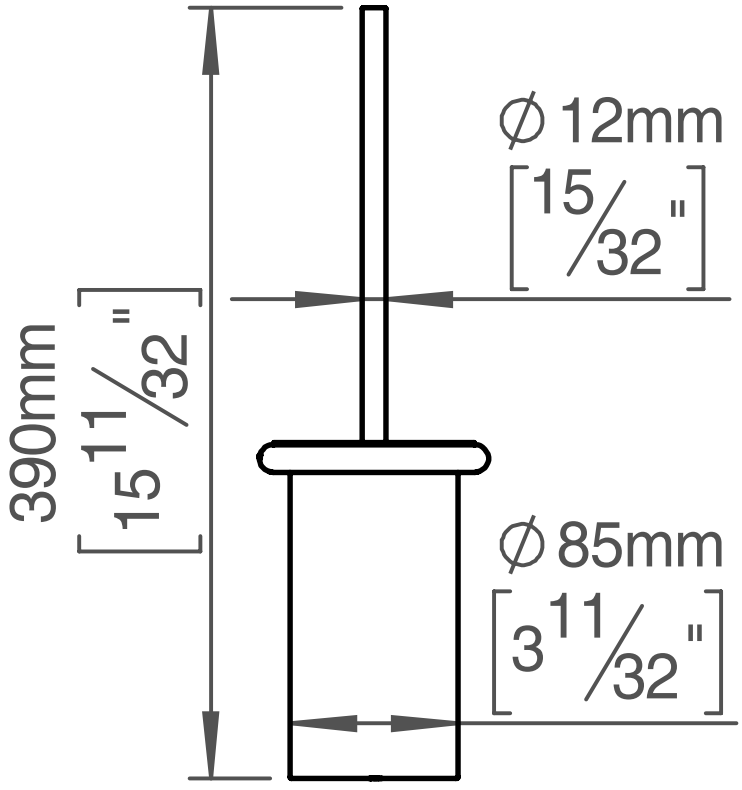
Ø 12mm
[15/32"]
390mm
[15 11/32"]
Ø 85mm
[3 11/32"]

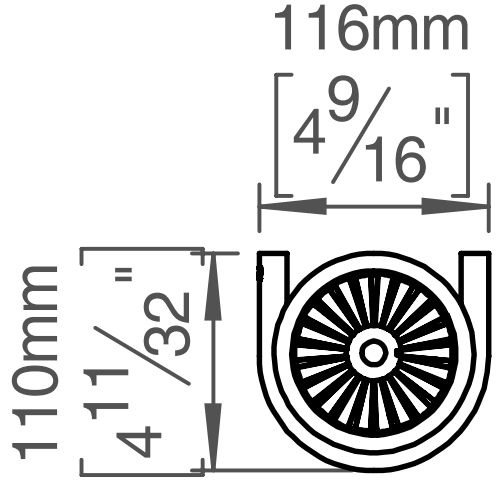
116mm
[4 9/16"]
110mm
[4 11/32"]