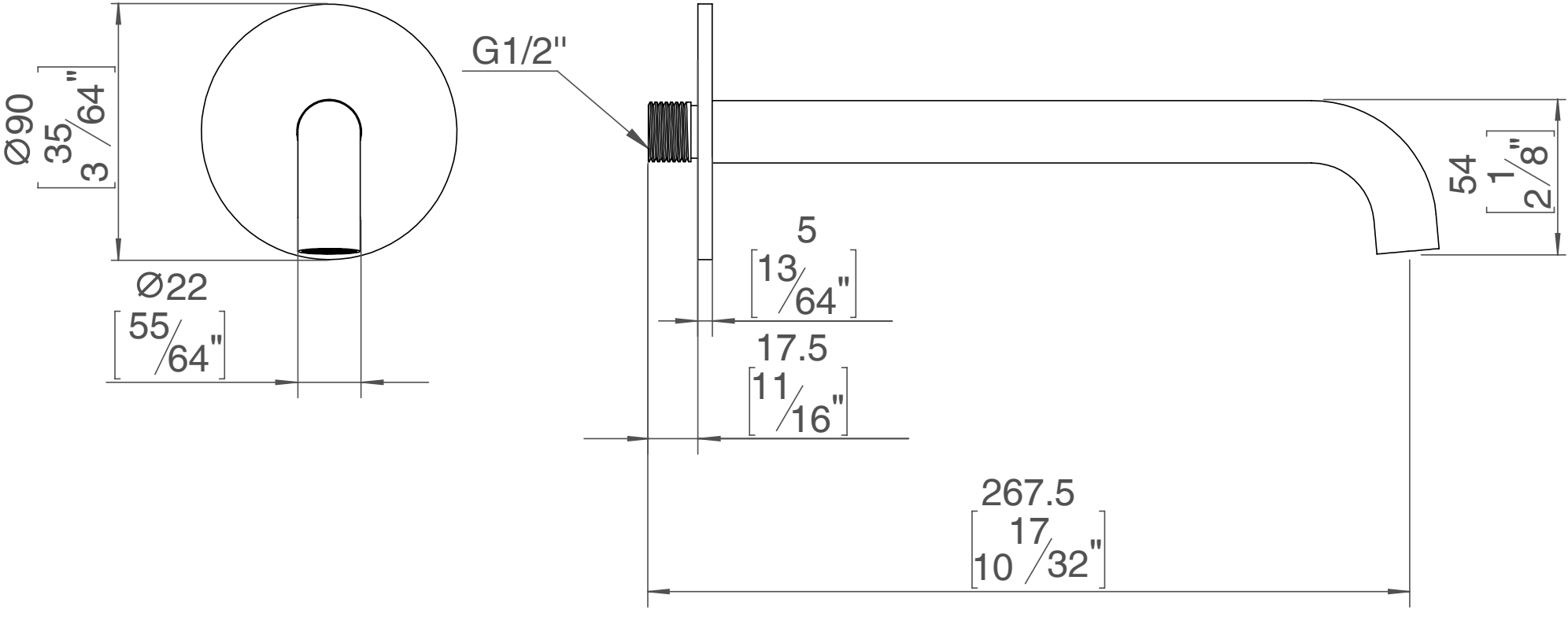
Ø90
35
[3 64"]
Ø22
[55/64"]
G1/2"
5
[13/64"]
17.5
[11/16"]
267.5
[10 17/32"]
54
[1 2/8"]