Product data sheet

Item number	Surface
14709202100	Satin finish

Toilet seat dispenser

Knud Holscher collection

Product	Wall mounted.
Tender text	Knud Holscher collection, toilet seat dispenser, wall mounted, self-tapping screws included. Manufactured in the highest quality marine grade, AISI 316 stainless steel, protecting against high levels of corrosion. 5-year warranty
Product specification	Dimensions: 300x285x129mm Material: stainless steel AISI 316 Surface finish: satin grain 320, crafted by hand 5-year warranty (5 years for coated items)

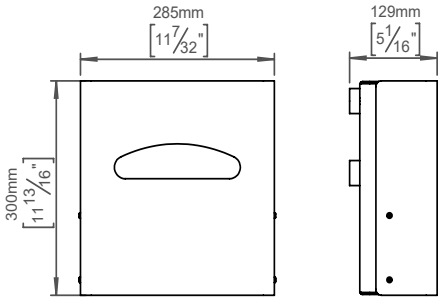

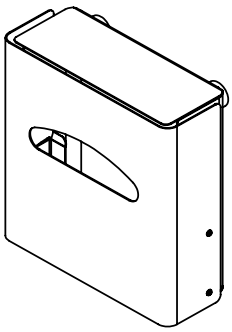

Available finishes

Spare parts/ accessories

Mounting	https://dline.com/mounting-instructions/

Product care

d line products are produced in the highest quality marine grade AISI 316 stainless steel. To sustain the unique d line finish please follow the below instructions:
- Wash down the surfaces using soapy water or mild detergent
- Always thoroughly rinse off with clean water
- To complete the cleaning procedure dry/polish the surface with a soft dry cloth

Please do not use scouring powder, steel wool, chloride based detergents or other aggressive cleaning products as these may damage the surface.
If spots or corrosion appear on the surface it is not due to the stainless steel quality, but to impurities in the environment, aggressive conditions or improper or insufficient cleaning.

d line Jyllingevej 59 | DK-2720 Copenhagen | dline.com | service@dline.com